OG

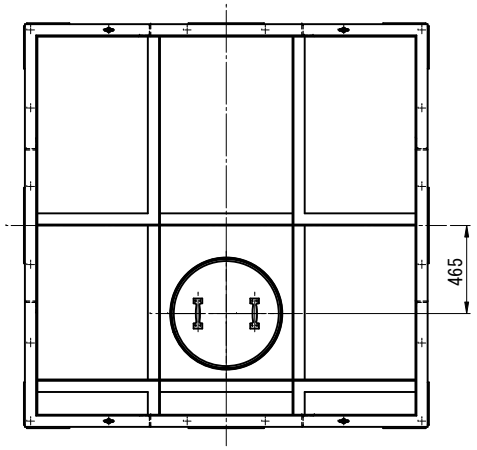

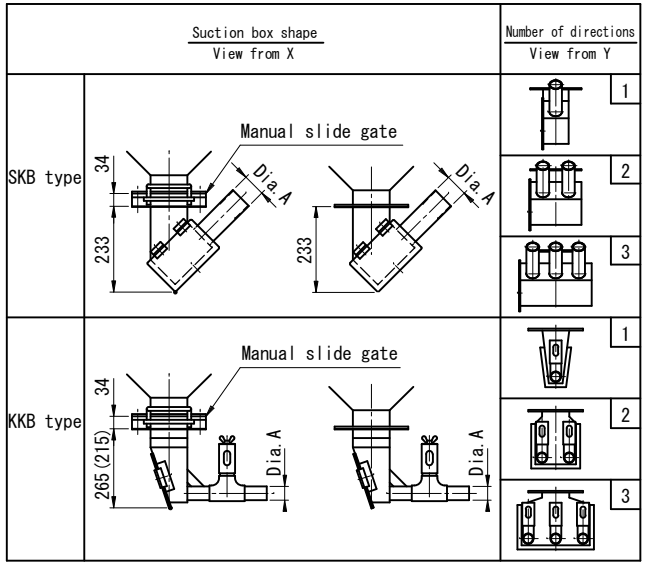

	ITEM NO.	DESCRIPTION	REQ.D	MATERIAL	REFERENCE
	1	Loading port lid	1	SUS304	
	2	Lid	1	SUS304 SS400	
Option	3	Prevention net for foreign mater from mixing	1	SUS304	
	4	Tank	1	SUS304 SS400	
	5	Frame	1	SS400	L75x75x6
	6	Level glass	2	PC	t3x100x300
	7	Square seat knob	2	Part of commerce	Zinc coating L160
Option	8	Lower limit level switch	1	TOWA SEIDEN	HL-100
	9	Material removal chute	1	MATSUI	50A
	10	Eye nut	4	Part of commerce	M12X40
	11	MATSUI seal	1	Polyester film	95x60
	12	Name plate	1	Polyester film	95x18

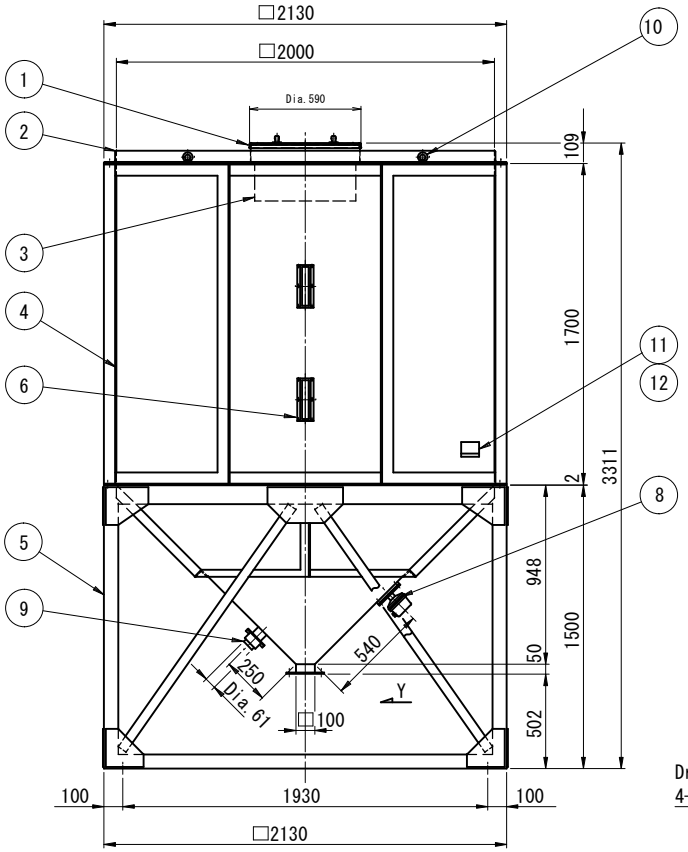

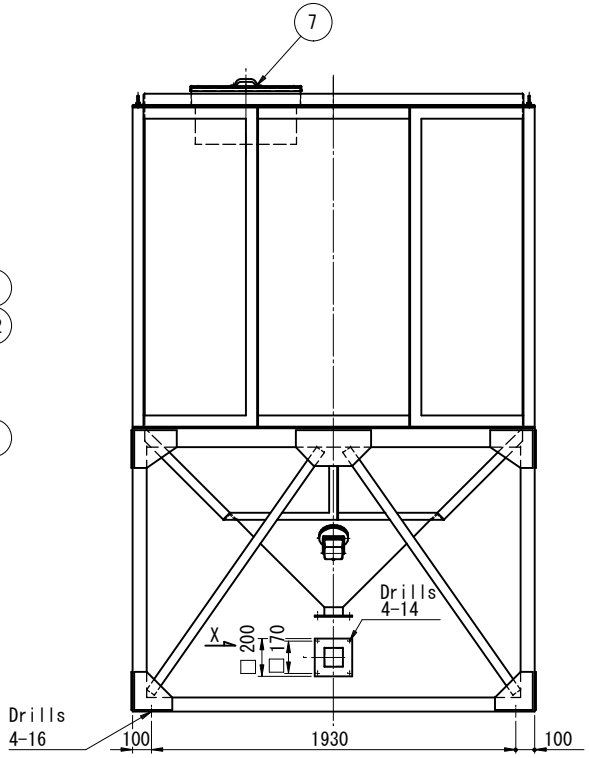

Empty weight9408N(960kgf)
(Excluding options)

(Option)

Suction box					Manual slide gate	Lower limit level switch
Shape	Dimension Dia.A		Number of directions		Without	Without
SKB	38.0	48.6	1	2	With	With
KKB	60.5	76.3	3			

REVISION				
MARK	DATE	CONTENTS	CHKD	APPD

NAME	G.A. of Material tank	FORM	T-8000L
APPROVED BY	MATSUMOTO	CODE NO.	
DSGND (CHKD) BY	SANDEEP	DATE	23-04-2020
DRAWN BY	HIMANSHU	UNIT mm	PLANE TRIGONOMETRY
SCALE	1/10	DWG. NO.	INA001152

MATSUI TECHNOLOGY INDIA LIMITED